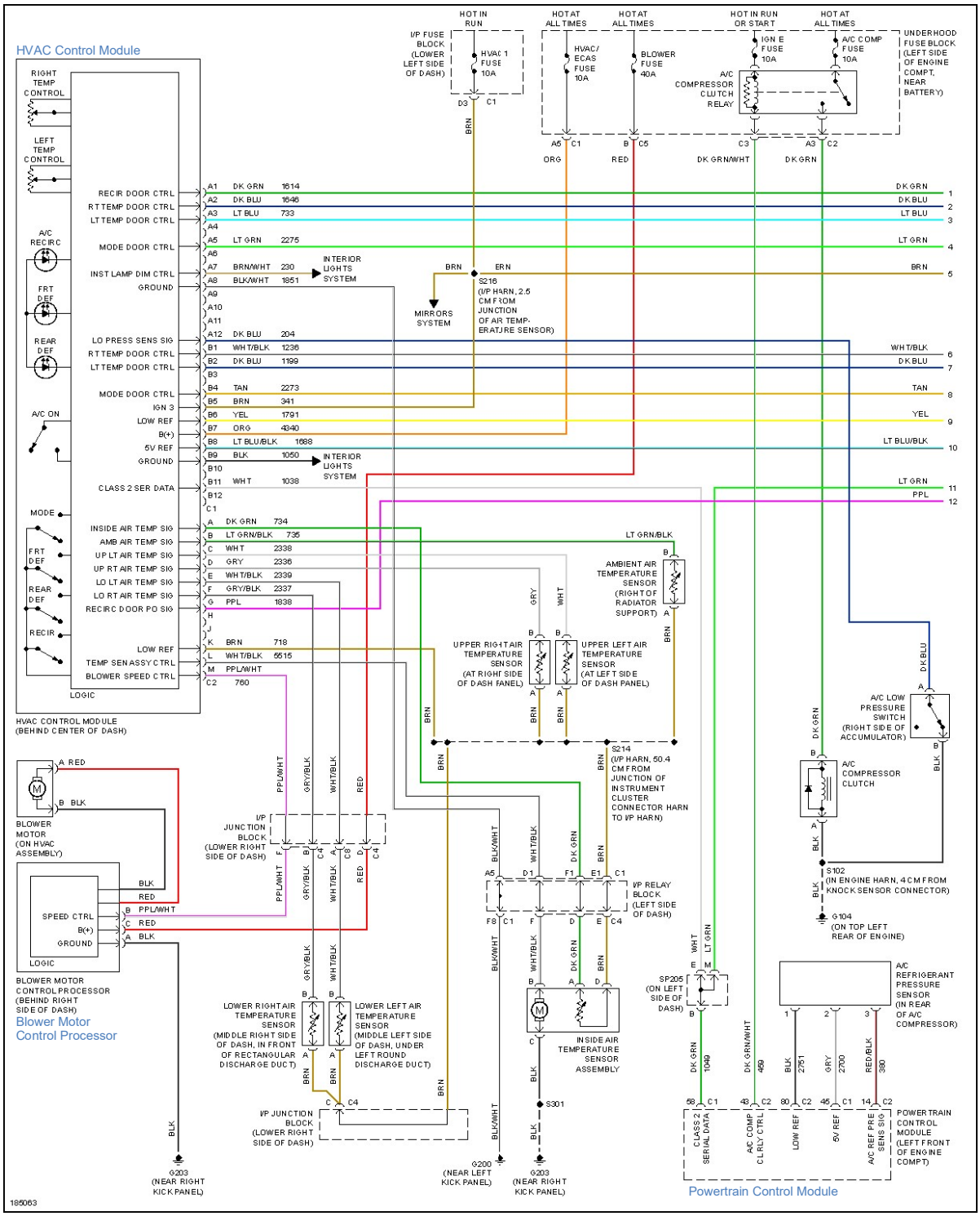
HVAC Control Module
RIGHT TEMP CONTROL
LEFT TEMP CONTROL
A/C RECIRC
FRT DEF
REAR DEF
A/C ON
MODE
FRT DEF
REAR DEF
RECIR
RECIR DOOR CTRL
RT TEMP DOOR CTRL
LT TEMP DOOR CTRL
MODE DOOR CTRL
INST LAMP DIM CTRL
GROUND
LO PRESS SENS SIG
RT TEMP DOOR CTRL
LT TEMP DOOR CTRL
MODE DOOR CTRL
IGN 3
LOW REF
B(+)
5V REF
GROUND
CLASS 2 SER DATA
INSIDE AIR TEMP SIG
AMB AIR TEMP SIG
UP LT AIR TEMP SIG
UP RT AIR TEMP SIG
LO LT AIR TEMP SIG
LO RT AIR TEMP SIG
RECIRC DOOR PO SIG
LOW REF
TEMP SEN ASSY CTRL
BLOWER SPEED CTRL
LOGIC
HVAC CONTROL MODULE (BEHIND CENTER OF DASH)
A1 DK GRN 1614
A2 DK BLU 1646
A3 LT BLU 733
A5 LT GRN 2275
A7 BRN/WHT 230
A8 BLK/WHT 1851
A12 DK BLU 204
B1 WHT/BLK 1236
B2 DK BLU 1199
B4 TAN 2273
B5 BRN 341
B6 YEL 1791
B7 ORG 4340
B8 LT BLU/BLK 1688
B9 BLK 1050
B11 WHT 1038
A DK GRN 734
B LT GRN/BLK 735
C WHT 2338
D GRY 2336
E WHT/BLK 2339
F GRY/BLK 2337
G PPL 1838
K BRN 718
L WHT/BLK 5515
M PPL/WHT
C2 760
INTERIOR LIGHTS SYSTEM
INTERIOR LIGHTS SYSTEM
MIRRORS SYSTEM
HOT IN RUN
HOT AT ALL TIMES
HOT AT ALL TIMES
HOT IN RUN OR START
HOT AT ALL TIMES
I/P FUSE BLOCK (LOWER LEFT SIDE OF DASH)
HVAC 1 FUSE 10A
HVAC/ECAS FUSE 10A
BLOWER FUSE 40A
IGN E FUSE 10A
A/C COMP FUSE 10A
A/C COMPRESSOR CLUTCH RELAY
UNDERHOOD FUSE BLOCK (LEFT SIDE OF ENGINE COMPT, NEAR BATTERY)
ORG
RED
DK GRN/WHT
DK GRN
S216 (I/P HARN, 2.5 CM FROM JUNCTION OF AIR TEMPERATURE SENSOR)
AMBIENT AIR TEMPERATURE SENSOR (RIGHT OF RADIATOR SUPPORT)
UPPER RIGHT AIR TEMPERATURE SENSOR (AT RIGHT SIDE OF DASH PANEL)
UPPER LEFT AIR TEMPERATURE SENSOR (AT LEFT SIDE OF DASH PANEL)
S214 (I/P HARN, 50.4 CM FROM JUNCTION OF INSTRUMENT CLUSTER CONNECTOR HARN TO I/P HARN)
A/C LOW PRESSURE SWITCH (RIGHT SIDE OF ACCUMULATOR)
A/C COMPRESSOR CLUTCH
S102 (IN ENGINE HARN, 4 CM FROM KNOCK SENSOR CONNECTOR)
G104 (ON TOP LEFT REAR OF ENGINE)
BLOWER MOTOR (ON HVAC ASSEMBLY)
A RED
B BLK
I/P JUNCTION BLOCK (LOWER RIGHT SIDE OF DASH)
I/P RELAY BLOCK (LEFT SIDE OF DASH)
SPEED CTRL
B(+)
GROUND
LOGIC
BLOWER MOTOR CONTROL PROCESSOR (BEHIND RIGHT SIDE OF DASH)
Blower Motor Control Processor
LOWER RIGHT AIR TEMPERATURE SENSOR (MIDDLE RIGHT SIDE OF DASH, IN FRONT OF RECTANGULAR DISCHARGE DUCT)
LOWER LEFT AIR TEMPERATURE SENSOR (MIDDLE LEFT SIDE OF DASH, UNDER LEFT ROUND DISCHARGE DUCT)
INSIDE AIR TEMPERATURE SENSOR ASSEMBLY
SP205 (ON LEFT SIDE OF DASH)
A/C REFRIGERANT PRESSURE SENSOR (IN REAR OF A/C COMPRESSOR)
I/P JUNCTION BLOCK (LOWER RIGHT SIDE OF DASH)
S301
G203 (NEAR RIGHT KICK PANEL)
G200 (NEAR LEFT KICK PANEL)
G203 (NEAR RIGHT KICK PANEL)
CLASS 2 SERIAL DATA
A/C COMP CLRLY CTRL
LOW REF
5V REF
A/C REF PRE SENS SIG
POWERTRAIN CONTROL MODULE (LEFT FRONT OF ENGINE COMPT)
Powertrain Control Module
185063

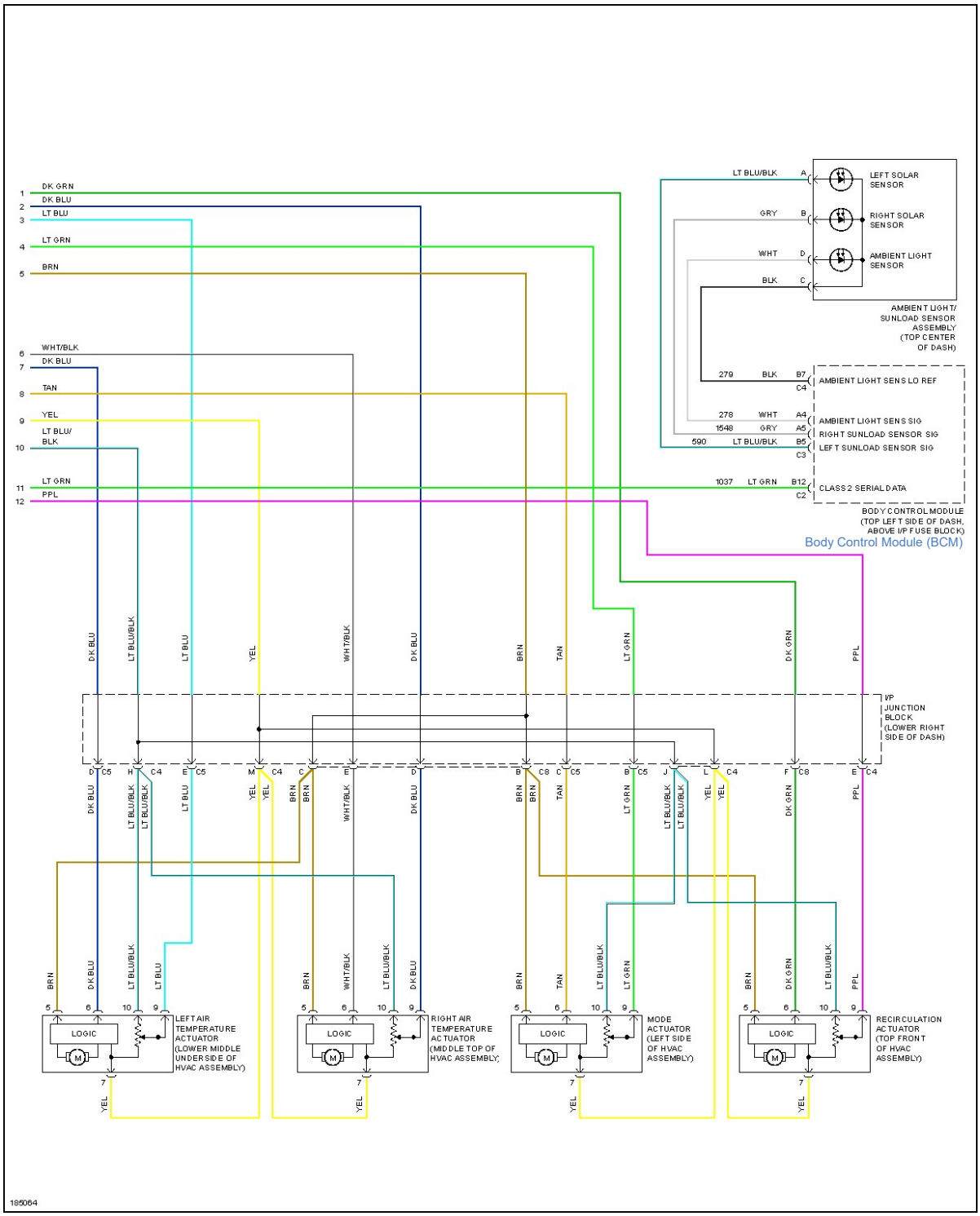
DK GRN
DK BLU
LT BLU
LT GRN
BRN
WHT/BLK
DK BLU
TAN
YEL
LT BLU/ BLK
LT GRN
PPL
LT BLU/BLK
GRY
WHT
BLK
LEFT SOLAR SENSOR
RIGHT SOLAR SENSOR
AMBIENT LIGHT SENSOR
AMBIENT LIGHT/ SUNLOAD SENSOR ASSEMBLY (TOP CENTER OF DASH)
279 BLK B7 C4
AMBIENT LIGHT SENS LO REF
278 WHT A4
AMBIENT LIGHT SENS SIG
1548 GRY A5
RIGHT SUNLOAD SENSOR SIG
590 LT BLU/BLK B5 C3
LEFT SUNLOAD SENSOR SIG
1037 LT GRN B12 C2
CLASS 2 SERIAL DATA
BODY CONTROL MODULE (TOP LEFT SIDE OF DASH, ABOVE I/P FUSE BLOCK)
Body Control Module (BCM)
I/P JUNCTION BLOCK (LOWER RIGHT SIDE OF DASH)
LOGIC
M
LEFT AIR TEMPERATURE ACTUATOR (LOWER MIDDLE UNDERSIDE OF HVAC ASSEMBLY)
RIGHT AIR TEMPERATURE ACTUATOR (MIDDLE TOP OF HVAC ASSEMBLY)
MODE ACTUATOR (LEFT SIDE OF HVAC ASSEMBLY)
RECIRCULATION ACTUATOR (TOP FRONT OF HVAC ASSEMBLY)
185064

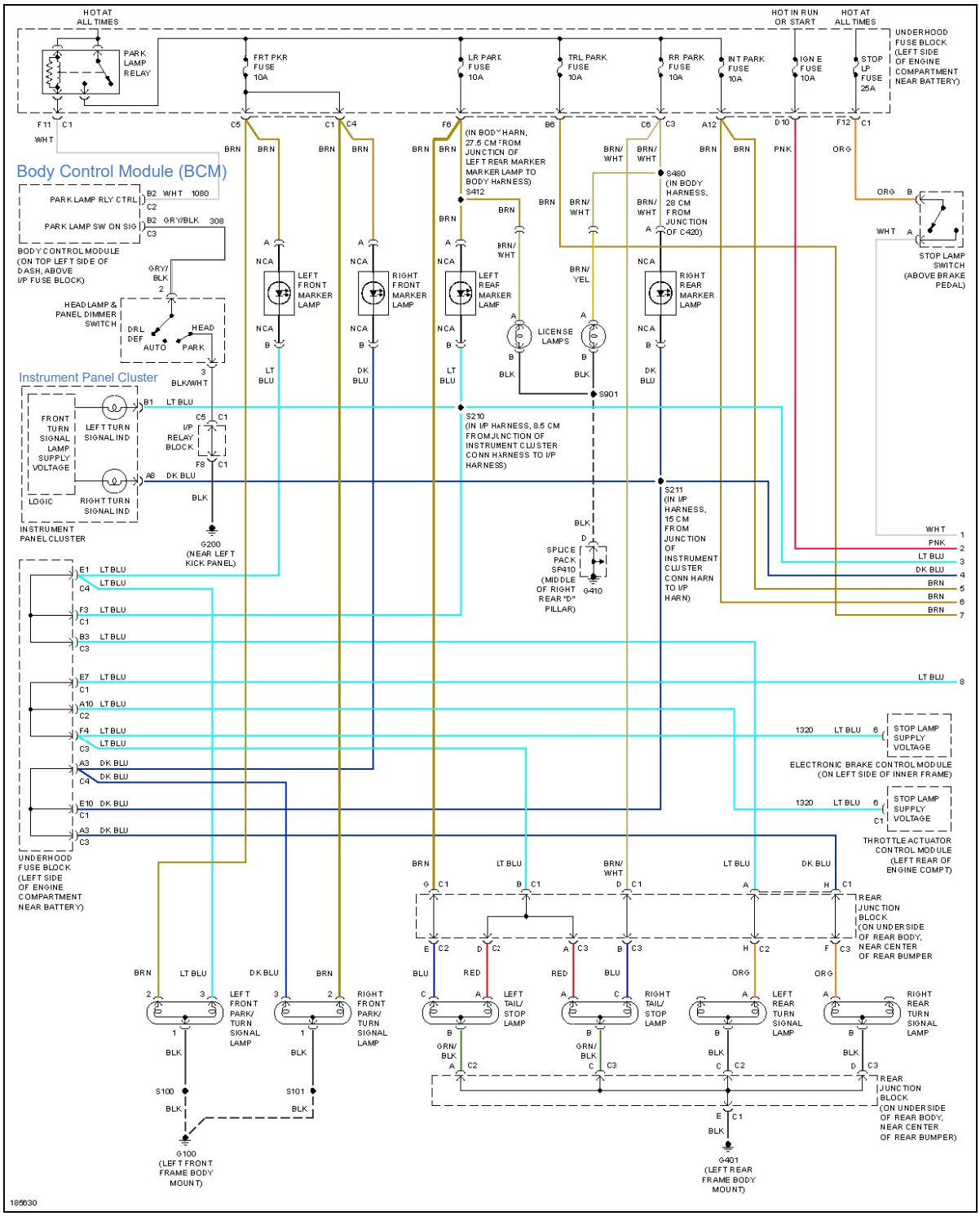
Body Control Module (BCM)
Instrument Panel Cluster
HOT AT ALL TIMES
HOT IN RUN OR START
PARK LAMP RELAY
FRT PKR FUSE 10A
LR PARK FUSE 10A
TRL PARK FUSE 10A
RR PARK FUSE 10A
INT PARK FUSE 10A
IGN E FUSE 10A
STOP LP FUSE 25A
UNDERHOOD FUSE BLOCK (LEFT SIDE OF ENGINE COMPARTMENT NEAR BATTERY)
PARK LAMP RLY CTRL
PARK LAMP SW ON SIG
BODY CONTROL MODULE (ON TOP LEFT SIDE OF DASH, ABOVE I/P FUSE BLOCK)
HEAD LAMP & PANEL DIMMER SWITCH
DRL DEF
AUTO
HEAD
PARK
LEFT FRONT MARKER LAMP
RIGHT FRONT MARKER LAMP
LEFT REAR MARKER LAMP
RIGHT REAR MARKER LAMP
LICENSE LAMPS
STOP LAMP SWITCH (ABOVE BRAKE PEDAL)
FRONT TURN SIGNAL LAMP SUPPLY VOLTAGE
LEFT TURN SIGNAL IND
RIGHT TURN SIGNAL IND
LOGIC
INSTRUMENT PANEL CLUSTER
I/P RELAY BLOCK
G200 (NEAR LEFT KICK PANEL)
S210 (IN I/P HARNESS, 8.5 CM FROM JUNCTION OF INSTRUMENT CLUSTER CONN HARNESS TO I/P HARNESS)
S211 (IN I/P HARNESS, 15 CM FROM JUNCTION OF INSTRUMENT CLUSTER CONN HARN TO I/P HARN)
S480 (IN BODY HARNESS, 28 CM FROM JUNCTION OF C420)
S412
S901
SPLICE PACK SP410 (MIDDLE OF RIGHT REAR "D" PILLAR)
G410
STOP LAMP SUPPLY VOLTAGE
ELECTRONIC BRAKE CONTROL MODULE (ON LEFT SIDE OF INNER FRAME)
THROTTLE ACTUATOR CONTROL MODULE (LEFT REAR OF ENGINE COMPT)
REAR JUNCTION BLOCK (ON UNDERSIDE OF REAR BODY, NEAR CENTER OF REAR BUMPER)
LEFT FRONT PARK/ TURN SIGNAL LAMP
RIGHT FRONT PARK/ TURN SIGNAL LAMP
LEFT TAIL/ STOP LAMP
RIGHT TAIL/ STOP LAMP
LEFT REAR TURN SIGNAL LAMP
RIGHT REAR TURN SIGNAL LAMP
S100
S101
G100 (LEFT FRONT FRAME BODY MOUNT)
G401 (LEFT REAR FRAME BODY MOUNT)
185630

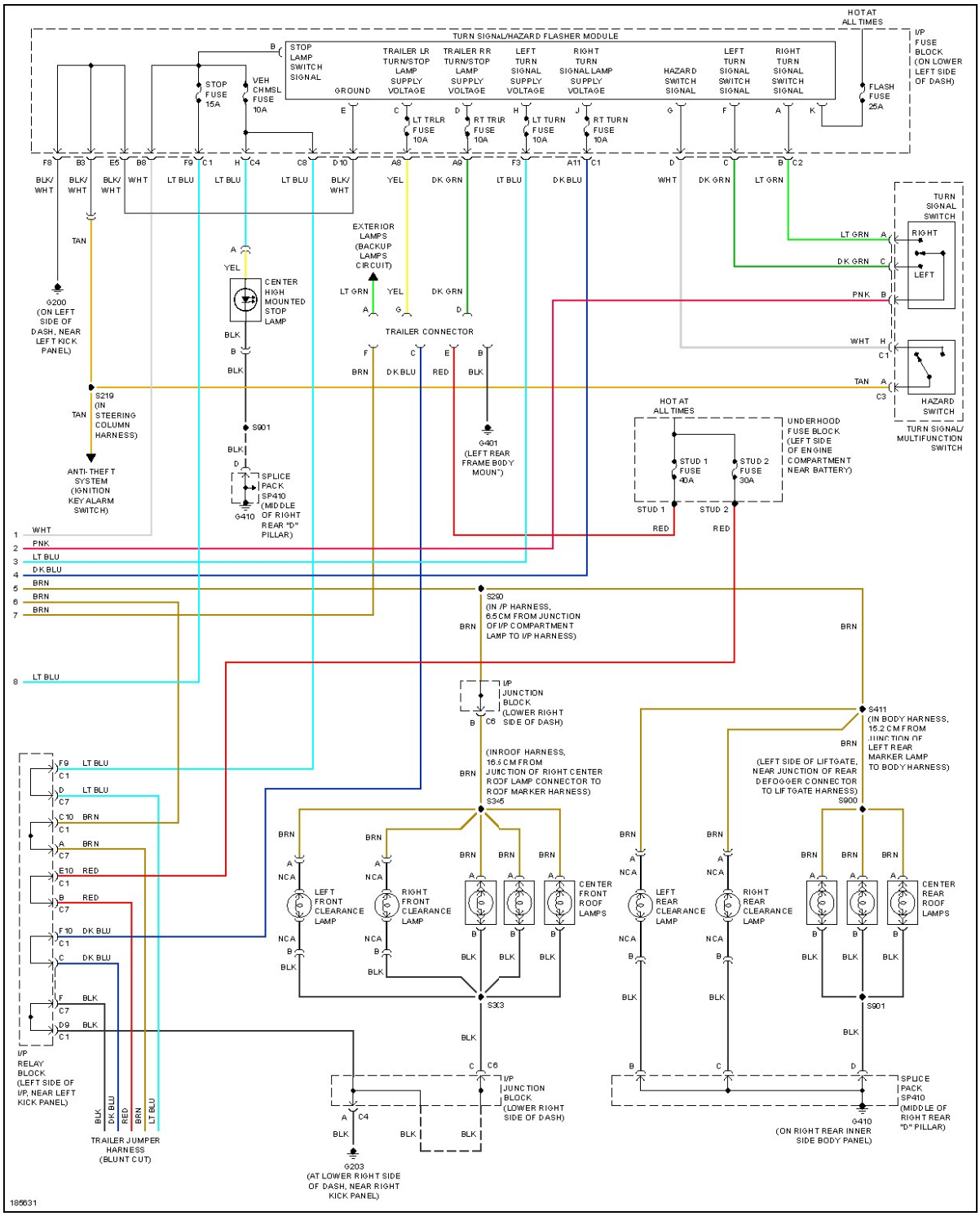
TURN SIGNAL/HAZARD FLASHER MODULE
HOT AT ALL TIMES
I/P FUSE BLOCK (ON LOWER LEFT SIDE OF DASH)
STOP LAMP SWITCH SIGNAL
GROUND
TRAILER LR TURN/STOP LAMP SUPPLY VOLTAGE
TRAILER RR TURN/STOP LAMP SUPPLY VOLTAGE
LEFT TURN SIGNAL SUPPLY VOLTAGE
RIGHT TURN SIGNAL LAMP SUPPLY VOLTAGE
HAZARD SWITCH SIGNAL
LEFT TURN SIGNAL SWITCH SIGNAL
RIGHT TURN SIGNAL SWITCH SIGNAL
STOP FUSE 15A
VEH CHMSL FUSE 10A
FLASH FUSE 25A
LT TRLR FUSE 10A
RT TRLR FUSE 10A
LT TURN FUSE 10A
RT TURN FUSE 10A
TURN SIGNAL SWITCH
RIGHT
LEFT
HAZARD SWITCH
TURN SIGNAL/ MULTIFUNCTION SWITCH
EXTERIOR LAMPS (BACKUP LAMPS CIRCUIT)
CENTER HIGH MOUNTED STOP LAMP
TRAILER CONNECTOR
G200 (ON LEFT SIDE OF DASH, NEAR LEFT KICK PANEL)
S219 (IN STEERING COLUMN HARNESS)
ANTI-THEFT SYSTEM (IGNITION KEY ALARM SWITCH)
S901
SPLICE PACK SP410 (MIDDLE OF RIGHT REAR "D" PILLAR)
G410
G401 (LEFT REAR FRAME BODY MOUNT)
HOT AT ALL TIMES
UNDERHOOD FUSE BLOCK (LEFT SIDE OF ENGINE COMPARTMENT NEAR BATTERY)
STUD 1 FUSE 40A
STUD 2 FUSE 30A
S290 (IN I/P HARNESS, 8.5 CM FROM JUNCTION OF I/P COMPARTMENT LAMP TO I/P HARNESS)
I/P JUNCTION BLOCK (LOWER RIGHT SIDE OF DASH)
C6
S411 (IN BODY HARNESS, 15.2 CM FROM JUNCTION OF LEFT REAR MARKER LAMP TO BODY HARNESS)
(IN ROOF HARNESS, 16.5 CM FROM JUNCTION OF RIGHT CENTER ROOF LAMP CONNECTOR TO ROOF MARKER HARNESS)
S345
(LEFT SIDE OF LIFTGATE, NEAR JUNCTION OF REAR DEFOGGER CONNECTOR TO LIFTGATE HARNESS)
S900
LEFT FRONT CLEARANCE LAMP
RIGHT FRONT CLEARANCE LAMP
CENTER FRONT ROOF LAMPS
LEFT REAR CLEARANCE LAMP
RIGHT REAR CLEARANCE LAMP
CENTER REAR ROOF LAMPS
S303
I/P RELAY BLOCK (LEFT SIDE OF I/P, NEAR LEFT KICK PANEL)
TRAILER JUMPER HARNESS (BLUNT CUT)
I/P JUNCTION BLOCK (LOWER RIGHT SIDE OF DASH)
G203 (AT LOWER RIGHT SIDE OF DASH, NEAR RIGHT KICK PANEL)
SPLICE PACK SP410 (MIDDLE OF RIGHT REAR "D" PILLAR)
G410 (ON RIGHT REAR INNER SIDE BODY PANEL)
185631

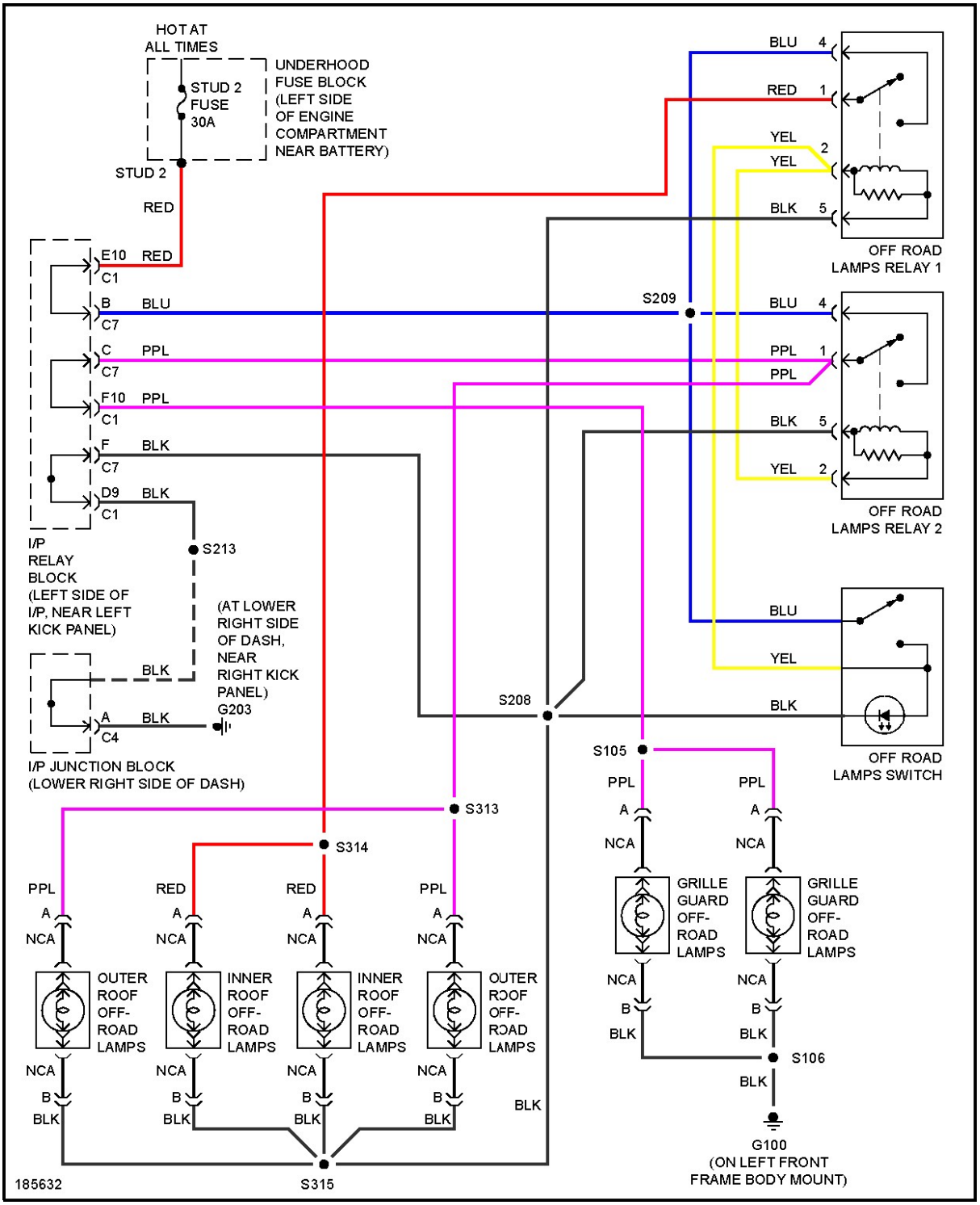
HOT AT
ALL TIMES
STUD 2
FUSE
30A
UNDERHOOD
FUSE BLOCK
(LEFT SIDE
OF ENGINE
COMPARTMENT
NEAR BATTERY)
STUD 2
RED
E10 RED
C1
B BLU
C7
C PPL
C7
F10 PPL
C1
F BLK
C7
D9 BLK
C1
I/P
RELAY
BLOCK
(LEFT SIDE OF
I/P, NEAR LEFT
KICK PANEL)
S213
(AT LOWER
RIGHT SIDE
OF DASH,
NEAR
RIGHT KICK
PANEL)
G203
BLK
A BLK
C4
I/P JUNCTION BLOCK
(LOWER RIGHT SIDE OF DASH)
S209
S208
S105
S313
S314
S315
S106
G100
(ON LEFT FRONT
FRAME BODY MOUNT)
BLU 4
RED 1
YEL 2
YEL
BLK 5
OFF ROAD
LAMPS RELAY 1
BLU 4
PPL 1
PPL
BLK 5
YEL 2
OFF ROAD
LAMPS RELAY 2
BLU
YEL
BLK
OFF ROAD
LAMPS SWITCH
PPL
A
NCA
OUTER
ROOF
OFF-
ROAD
LAMPS
RED
INNER
ROOF
OFF-
ROAD
LAMPS
GRILLE
GUARD
OFF-
ROAD
LAMPS
B
BLK
185632